FIXTURLASER® Roll 200

Roll Alignment System

The Fixturlaser Roll[200] is an innovative new laser alignment system providing advanced measurement capabilities for paper machines and other roll applications. The system is easy to use for measurement and alignment as well as for documenting the results.
The Fixturlaser Roll[200] is built on the same platform used as the basis for other Fixturlaser alignment systems. The Fixturlaser Platform offers the advantage of upgradability to other Fixturlaser products.



Roll parallel measurements being done by plant maintenance personnel during an unscheduled outage.

Quick, Easy & Precise

The Fixturlaser Roll[200] delivers state-of-the-art measurement and alignment capabilities.

- Easy to use and easy to learn — the intuitive user interface gurantees maximum usability.
- High accuracy — one micron resolution (1/1000mm).
- Quick and easy setup means access to alignment wherever and whenever you need it.
- Live values on-screen provide constant feedback on roll position as adjustments are made.
- Flexibility allows use of either floor datum or a selected roll as the reference point for measurements.
- Onboard system memory, plus printer and data ports allow complete documentation of every roll measurement.

Upgradability

The Fixturlaser Roll[200] is based on the Fixturlaser Platform providing full upgradability to existing and future products. Meaning your initial investment is always protected. The unique upgradability let you upgrade the Fixturlaser Roll[200] with capabilities for shaft alignment, or, if you already have a Fixturlaser Shaft[100/200] you can upgrade to a Fixturlaser Roll[200].

Applications in paper machines covered by the Fixturlaser Roll[200]

The Headbox

Straightness of the headbox lip profile.
Parallelism between the headbox and the breast roll.

The Foil section

Flatness of the foils.

The Press section

Horizontal parallel alignment of the press rolls.
Straightness measurement of the press rolls.
Check of the deflection-compensating rolls.

The Dryer section

Horizontal and vertical parallel alignment of the rolls.

The Calender

Horizontal parallel alignment of the rolls.

The Winder

Horizontal parallel alignment of the tambour rolls.

The Coating section

Horizontal parallel alignment of the rolls.

FIXTUR LASER

FIXTURLASER Roll[200]

An easy to use measurement system that tells you where rolls are. An alignment system that helps you position rolls for optimum performance. Plus an easy way to document the alignment. The Fixturlaser Roll[200] is designed to do it all.

What it's all about

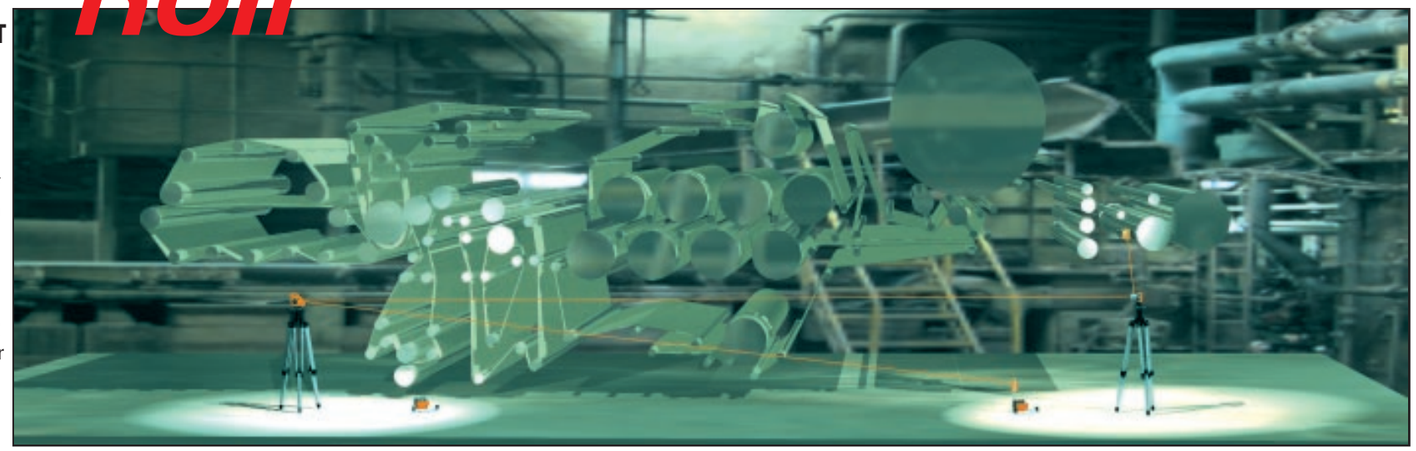

The Fixturlaser Roll[200] is designed to get the roll where they ought to be, quickly, easily and precisely no matter who the user is. In fact, we developed the Fixturlaser Roll[200] with different types of potential users in mind. By combining an easy to use graphical user interface with advanced measurement functions, the Fixturlaser Roll[200] will suit the experienced metrologist as well as the machine maintenance personnel with limited roll parallel experience.

The Measurement Phase

- Easy set-up gives measurement access when you need it.
- One micron resolution (1/1000 mm).
- Flexible presentation of results: deviation per meter, deviation per roll length or deviation as an angle.
- Reference can be checked any time during the measurement process. You do not need to re-measure the rolls.
- Measurements can be made on rolls of any size or material.
- Every roll can be assigned a user-defined tag.

The Alignment Phase

- Choose the floor datum or any of the measured rolls as reference.
- Align each roll during the measurement phase or after all measurements have been taken.
- On-screen live values guides the operator towards "zero" to achieve alignment.

The Documentation Phase

- Display and graphical output documents of the roll position.
- Horizontal and vertical position related to the reference.
- Communication port for printer and PC connection.
- Date and time stamp.

The Fixturlaser Roll[200] setup and operations

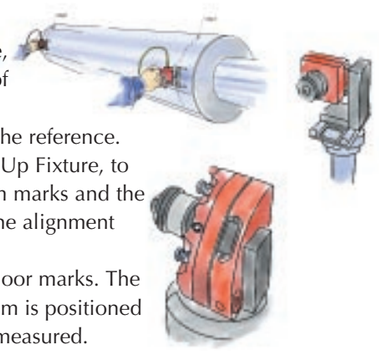

The design of the Fixturlaser Roll[200] is based on years of experience performing roll parallelism measurement and alignment. The hardware, fixtures and software have been specifically created to make the job of roll alignment quick, easy and precise.
One of the most sensitive procedures in roll alignment is the setup of the reference. The Fixturlaser Roll[200] uses a unique new fixture, the Datum Line Pick-Up Fixture, to simplify reference setup. The fixtures are simply placed over the datum marks and the laser is lined up. The fixtures remain on the datum marks throughout the alignment process, allowing you to re-check the reference at any time.
The illustration above shows the Datum Line Pick-Up Fixtures on the floor marks. The FL100 Laser Transmitter is on the tripod at the left and the Angular Prism is positioned on a tripod at the right, deflecting the laser beam along the roll to be measured. Measurement readings are taken at both ends of the roll. The Angular Prism and the Detector are then moved from roll to roll until all measurements have been taken.

The proven Fixturlaser touchscreen interface

The Fixturlaser Roll[200] features a unique graphical user interface for ease of use. The backlit touch sensitive screen provides the user with a clear and easily operated tool displaying only the information required at each step of the alignment process. Intuitive, easy to identify icons replace text thereby minimizing the risk for confusion and input errors.

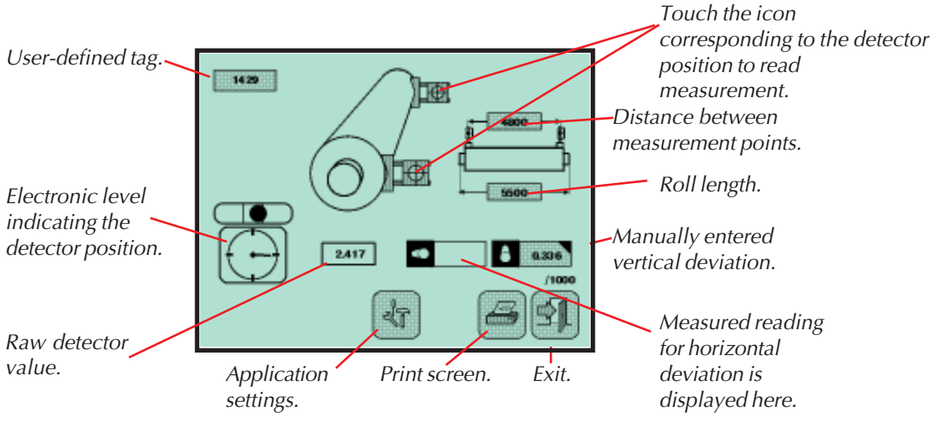

The Display unit

The Fixturlaser Roll[200] is operated from the display unit. The icon based touchscreen guides the operator through the process. The backlit screen gives the graphic view of the machine and how the rolls are positioned.

The FL100

The FL100 is a laser transmitter with working range of 100 meters. The laser beam is accurately adjusted in all directions by micrometer screws and spirit levels. The beam can be rotated to sweep a plane 360° for flatness measurement.

The datum line pick-up fixture

This unique precision machined fixture is positioned on the datum mark. The detector picks up the floor reference line electronically.

The angular prism

The angular prism deflects the laser beam 90°. The angular prism has a built in slide table and angular adjustment screws for fine tuning.

The FD15

The detector, FD15, is a tool for accurate positioning of the angular prism. It utilizes a laser detector for highest measurement accuracy.

The detector

The Detector unit is the same as those delivered with the Fixturlaser Shaft alignment systems. The detector has a 20x20 mm large detector and a built in inclinometer.



TECHNICAL SPECIFICATION

TRANSMITTER FL100

Housing material	Precision machined aluminum
Laser class	Class 2
Laser wavelength	675 nm, visible red light
Measuring distance	Up to 50 meters (150 feet)
Temperature range	0 - 40 °C (32 - 104°F)
Power supply	4 x LR6 (6volts)
Operating time	20 hrs
Weight	3,5 kg
Dimensions	175x175x115 mm

DETECTOR UNIT

Housing material	Die-cast aluminum
Laser class	Class 2
Laser wavelength	675 nm, visible red light
Detector size	20x20 mm (3/4"x3/4")
Displayed resolution	Selectable 0,1 - 0,01 - 0,001 mm (1 - 0,1 mils)
Inclinometer accuracy	± 1° (TD-M unit)
Temperature range	0 - 50 °C (32 - 122°F)
Filter for difficult measurement environment	Steplessly variable 0-10
Light stabilization	No interference from ambient light
Measurement accuracy	±1% ±0,003 mm
Dimensions	115x72x42 mm
Weight	0,3 kg

ANGULAR PRISM

Accuracy in deflection	90°±0,02mm/m
Weight	0,9 kg
Dimensions	90x115x130 mm

DISPLAY UNIT

Housing material	PP covered with Dryflex™
Display type	6" backlit monochrome VGA
Keyboard type	Icon based touch screen
Power supply	4 x LR20 (1,5 Volts alkaline batteries)
Temperature range	0 - 40°C (0 - 104°F)
Battery lifetime	24 h in cycles of 50% operation and 50% sleep mode
Dimensions	230x180x60 mm
Weight	0,99 kg



UPGRADABILITY

The Fixturlaser Roll[200] can easily be upgraded adding more comprehensive functions. This protects your investment. You will always be able to add future functions and developments.

ISO9001 AND YEAR 2000 COMPLIANCE

Fixturlaser AB is ISO 9001 certified. The Fixturlaser Roll[200] is Year 2000 compliant, which means that the entry into the next millenium will not affect the product in any way.

THE FIXTURLASER® ROLL[200]

2 Rugged aluminum case
1 Detector unit with built-in inclinometer
1 Display unit with software
1 Laser transmitter, FL 100
1 Angular prism
1 Detector, FD15
2 Angular brackets
2 Sliding tables
1 Magnetic base
2 Datum line pick-up fixtures
1 Datum line pick-up probe
1 Low profile fixture
1 Cable 3m
8 Rods
1 Handle
1 Measuring tape
1 Tool
1 Printer
1 Manual



ACCESSORIES

- Tripod
- AC-adapter
- Adcom Dynamic PC-software for dynamic measurements
- Cable 25 m
- Cable 10 m
- Cable 1 m
- Cable for PC communication
- Rolls for magnetic base
- Leatherette Protection cover for the display unit.

FIXTURLASER AB
Box 7
SE-431 21 Mölndal
Sweden
Phone: +46 31 706 28 00
Fax: +46 31 706 28 50
E-mail: info@fixturlaser.se
Website: www.fixturlaser.se

Publ. No: P-0074-GB